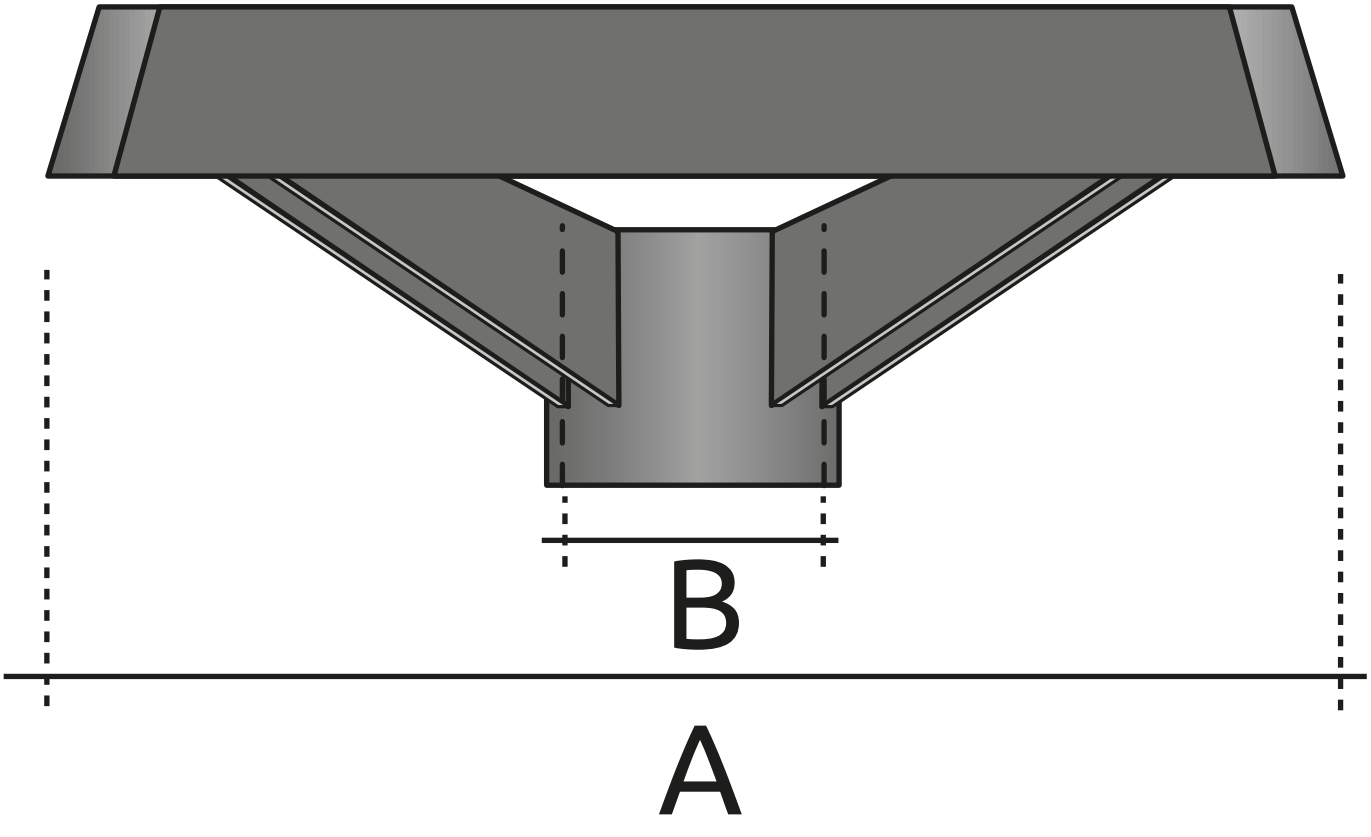
B
A